PROTEK
Processteknik GH AB

ADCA Pure

SANITARY PRESSURE REDUCING VALVE
P130L

DESCRIPTION

The ADCA P130L low flow series direct acting, spring-loaded diaphragm sensing pressure reducing valves are designed for use with clean air, nitrogen, carbon dioxide, oxygen, argon and other gases or liquids compatible with the construction materials and valve design. This valve is specifically designed for the high purity gas systems found in the pharmaceutical, cosmetic, fine chemical and food & beverage processes.

MAIN FEATURES

Compact design.
Completely machined from 316L stainless steel bar stock, no castings or forgings are used.
FDA / USP Class VI compliant seals.
Non-rising adjustment knob.

STANDARD SURFACE FINISH

Internal wetted parts: ≤ 0,51 micron Ra – SF1.
External: ≤ 0,76 micron Ra – SF3.
Other surface conditions see IS PV20.00 E – Technical information.
Ultrasonic cleaning.

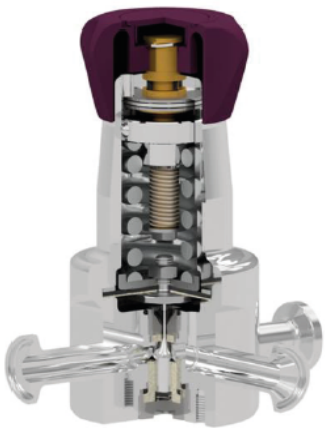

OPTIONS: Self relieving.
Leakage line connection 1/8" (captured vent).
Panel mounting version (thread M45).
Gauge connection on body.
Different soft valves for liquids and gases.
Wall mounting.

USE: Clean air, nitrogen, carbon dioxide, oxygen, argon and other gases or liquids compatible with the construction.

AVAILABLE MODELS: P130L – low flow.

SIZES: 1/2" to 3/4"; DN 08 to DN 20.

REGULATING RANGES: 0,2 – 1,5 bar; 0,3 – 3 bar; 2 – 8 bar.

CONNECTIONS: ASME BPE, DIN and ISO clamp ferrules or tube weld (ETO) ends.
Others on request.

PACKAGING: Assembling and packaging in a clean room certified according to ISO 14644-1.
The product is end capped and sealed with recyclable thermo-shrinkable plastic film, to avoid contamination.

INSTALLATION: Any position.
See IMI – Installation and maintenance instructions.

LIMITING CONDITIONS	
Valve model	**P130L**
Body design conditions	PN 16
Maximum upstream pressure	16 bar
Maximum downstream pressure	8 bar
Minimum downstream pressure	0,2 bar
Maximum design temperature *	150 ºC

* Others on request.

CE MARKING – GROUP 2 (PED – European Directive)	
PN 16	**Category**
1/2" to 3/4" – DN 08 to 20	SEP

FLOW RATE COEFFICIENTS (m³/h)									
	BPE			DIN			ISO		
SIZE	1/2" to 3/4"			DN 10 to DN 20			DN 08 to DN 15		
Kvs	0,06	0,19	0,25	0,06	0,19	0,25	0,06	0,19	0,25

DIMENSIONS (mm) ASME BPE										
SIZE	A	B	C	D	d1	d2	E	F	H	WEIGHT (kg) *
1/2"	115	23	120	64	25	15,75	65	25	9,4	2,13
3/4"	115	23	120	64	25	15,75	65	25	15,75	2,14

* Valves with nylon adjustment knob weigh 0,3 kg less.

DIMENSIONS (mm) DIN										
SIZE	A	B	C	D	d1	d2	E	F	H	WEIGHT (kg) *
DN 10	115	23	120	64	25	15,75	65	34	10	2,11
DN 15	115	23	120	64	25	15,75	65	34	16	2,13
DN 20	115	23	120	64	25	15,75	65	34	20	2,15

* Valves with nylon adjustment knob weigh 0,3 kg less.
Remarks: Clamp ferrules according to DIN 32676-A; Tube weld (ETO) according to DIN 11866-A (DIN 11850-2).

DIMENSIONS (mm) ISO										
SIZE	A	B	C	D	d1	d2	E	F	H	WEIGHT (kg) *
DN 08	115	23	120	64	25	15,75	65	25	10,3	2,11
DN 10	115	23	120	64	25	15,75	65	25	14	2,12
DN 15	115	23	120	64	25	15,75	65	50,5	18,1	2,13

* Valves with nylon adjustment knob weigh 0,3 kg less.
Remarks: Clamp ferrules according to DIN 32676-B; Tube weld (ETO) according to DIN 11866-B (ISO 1127).

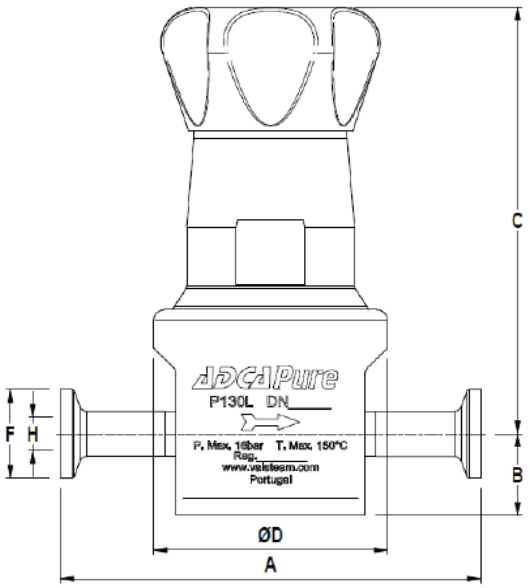

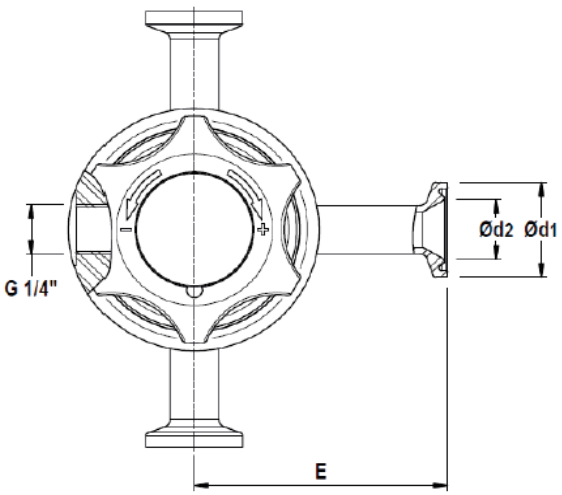

Optional pressure gauge connection.

MATERIALS		
POS. Nº	DESIGNATION	MATERIAL
1	Valve body	AISI 316L / 1.4404
2	Cover	AISI 316L / 1.4404
3	Seat cover	AISI 316L / 1.4404
4	* O-ring	Viton ; EPDM
5	* Valve	AISI 316L / 1.4404
6	* Valve seat seal	TFM 1600 ; EPDM ; ...
7	* Valve seat	AISI 316L / 1.4404
8	* O-ring	EPDM
10	Guide	TFM 1600
11	* Valve spring	AISI 316 / 1.4401 electropolished
12	Pusher disc	AISI 316L / 1.4404
13	* Lower diaphragm	PTFE (Gylon)
14	* Upper diphragm	EPDM
15	Washer	AISI 304 / 1.4301
16	Spring plate	AISI 316 / 1.4401
17	Nut	Stainless steel A2-70
18	* Adjustment spring	AISI 302 / 1.4300
19	Spring plate	AISI 316 / 1.4401
20	Adjustment screw	Brass
21	Retaining washer	Stainless steel A2-70
22	Adjustment knob	AISI 316L / 1.4404
		Nylon
23	O-ring	NBR
24	** O-ring	EPDM
25	Bearing	Corrosion resistant steel
26	Ext. bowed shaft ring	Stainless steel
27	Cover nut	Plastic
28	Captured vent ring	AISI 316L / 1.4404

* Available spare parts; ** If applicable.
Remarks: FDA / USP Class VI seals certificate on request.
All valves have a serial number. In case of non-standard valves, this number must be supplied if spare parts are ordered.

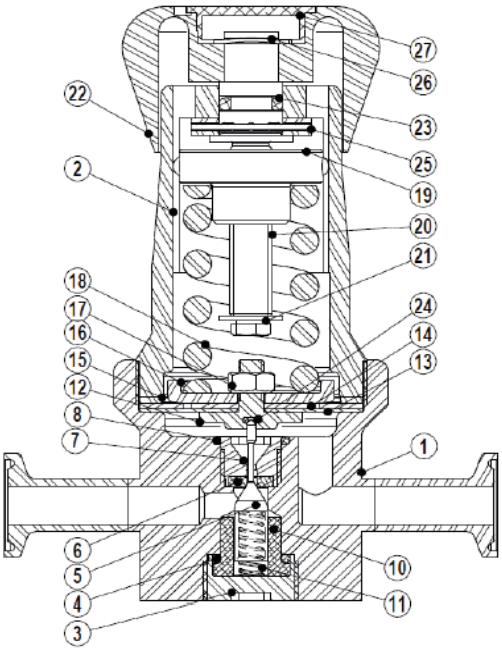

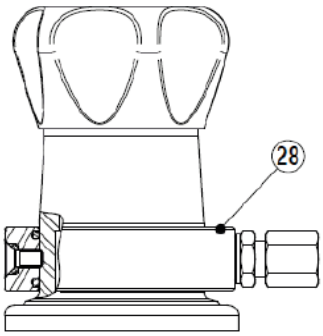

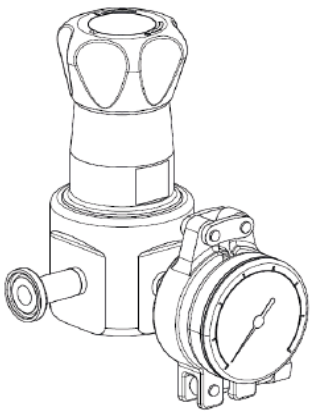

Optional Pressure gauge connection.

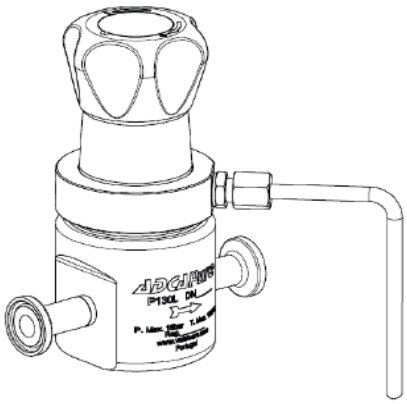

Optional 1/8" captured vent and/or leakage connection (compression fitting and tube not included).