PROTEK
Processteknik GH AB

ADCAPure

BALANCED PRESSURE THERMOSTATIC STEAM TRAP
Clean Steam Trap TSS7
(1/2" – 1" ASME BPE)

DESCRIPTION
The TSS7 all stainless steel thermostatic steam traps and air vents are specifically designed for use in reactors, sterilizers and distribution lines in clean and pure steam systems.
Their small size makes them ideal for use with a wide variety of these equipments.

MAIN FEATURES
Modulating discharge.
Wide range of connections options.
Excellent air discharge.
Simple and compact design.

STANDARD SURFACE FINISH
Internal wetted parts: ≤ 0,51micron Ra – SF1.
External: ≤ 0,76 micron Ra – SF3.
Other surface conditions see IS PV20.00 E – Technical information.
Ultrasonic cleaning.

OPTIONS: Special designs under request.

USE: Saturated clean steam.

AVAILABLE MODELS: TSS7.

SIZES: 1/2", 3/4" and 1".

CONNECTIONS: ASME BPE.
Clamp ferrules or others on request.

PACKAGING: Assembling and packaging in a clean room certified according to ISO 14644-1.
The product is end capped and sealed with recyclable thermo-shrinkable plastic film, to avoid contamination.

INSTALLATION: Vertical installation.

PMA	Max. allowable pressure	10 bar
TMA	Max. allowable temperature	177 ºC
PMO	Max. operating pressure	6 bar
TMO	Max. operating temperature	165 ºC

FLOW RATE CAPACITY (kg/h)										
MODEL	SIZE	DIFFERENTIAL PRESSURE (bar)								
		0,2	0,3	0,5	1	1,5	2	3	4	6
TSS7 (A)	1/2" to 1"	73	92	177	269	334	468	730	792	900
TSS7 (B)	1/2" to 1"	398	475	574	656	745	820	944	1190	1436

A = Condensate discharge at 5 º C below saturation temperature. **B** = Cold water capacity around 20 ºC.

DIMENSIONS (mm) ASME BPE								
SIZE	A	B	C	D	E	G	I	WGT. (kg)
1/2"	49	87	57,5	61	56,5	25	9,4	0,6
3/4"	49	87	57,5	61	56,5	25	15,75	0,6
1"	53	87	57,5	61	56,5	50,5	22,1	0,7

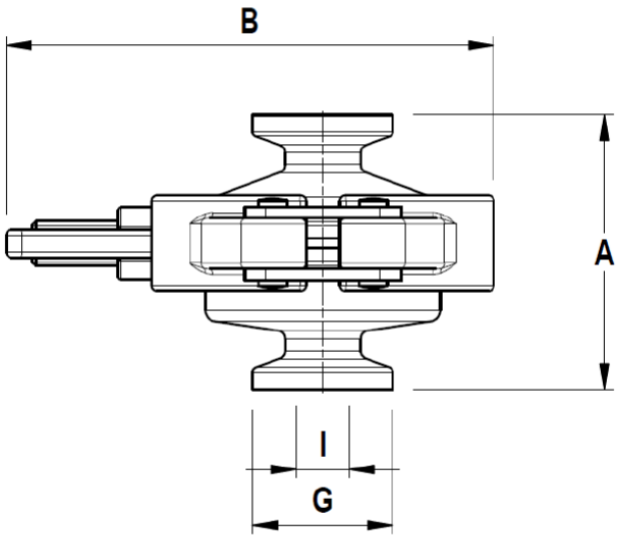

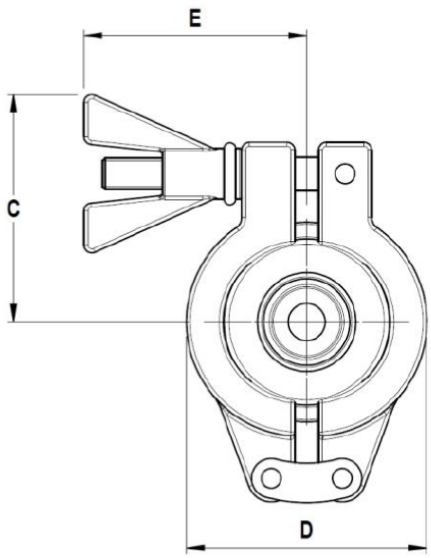

MATERIALS		
POS. Nº	DESIGNATION	MATERIAL
1	Body	AISI 316L / 1.4404
2	Cover	AISI 316L / 1.4404
3	* Thermostat	AISI 316L / 1.4404
4	* Gasket	PTFE / TFM® Envelope gasket **
5	Safety clamps	AISI 316 / 1.4401
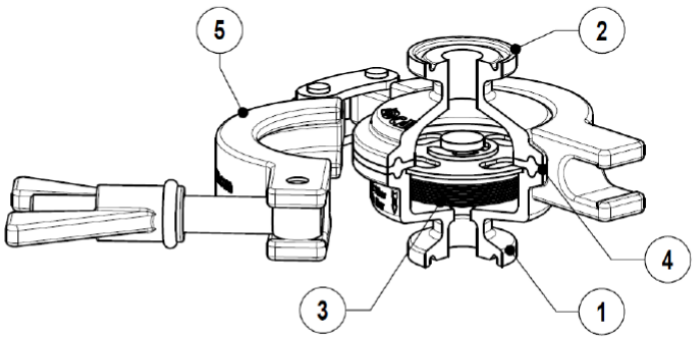
* Available spare parts.
** FDA/USP Class VI seals certificate on request.